Spare Parts for 2616EMC Single Door Electromechanical Door Closer

2616-121 (1)

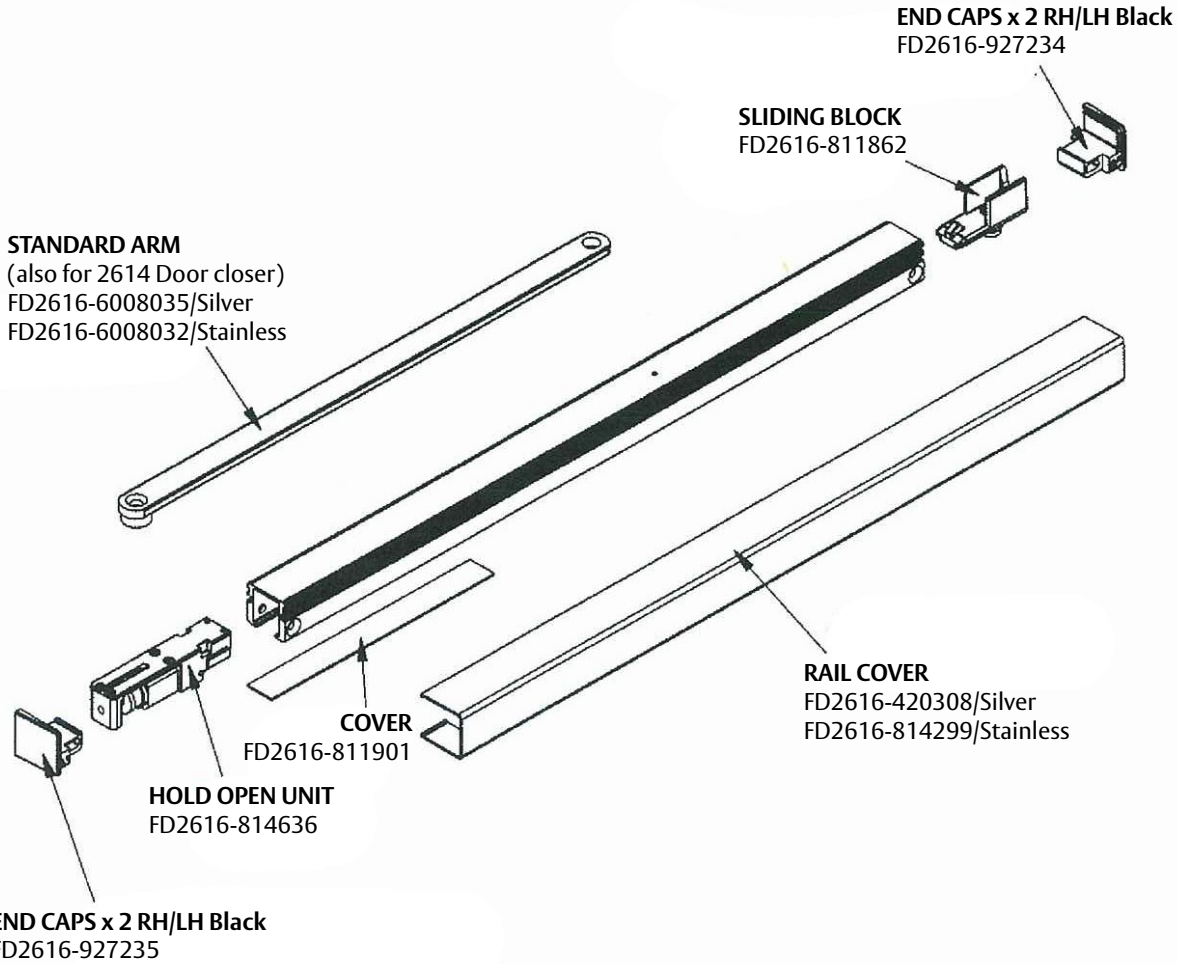

Spare Parts for 2616EMCD & CO Double Door Electromechanical Door Closer

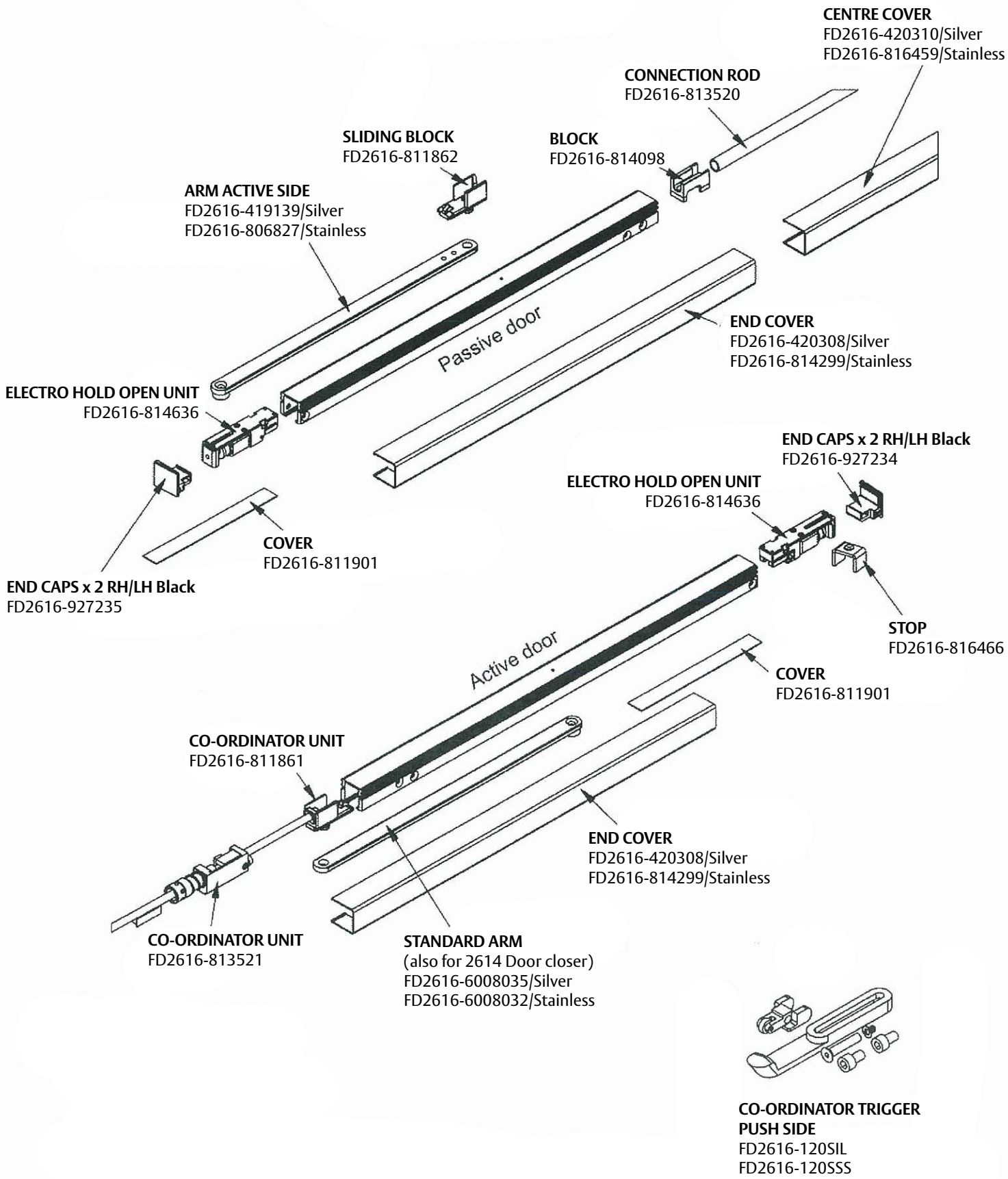

ASSA ABLOY Australia Pty Limited, 235 Huntingdale Rd, Oakleigh, VIC 3166 ABN 90 086 451 907 ©2025